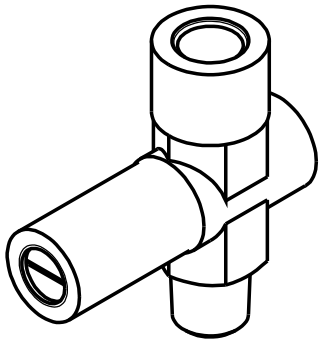

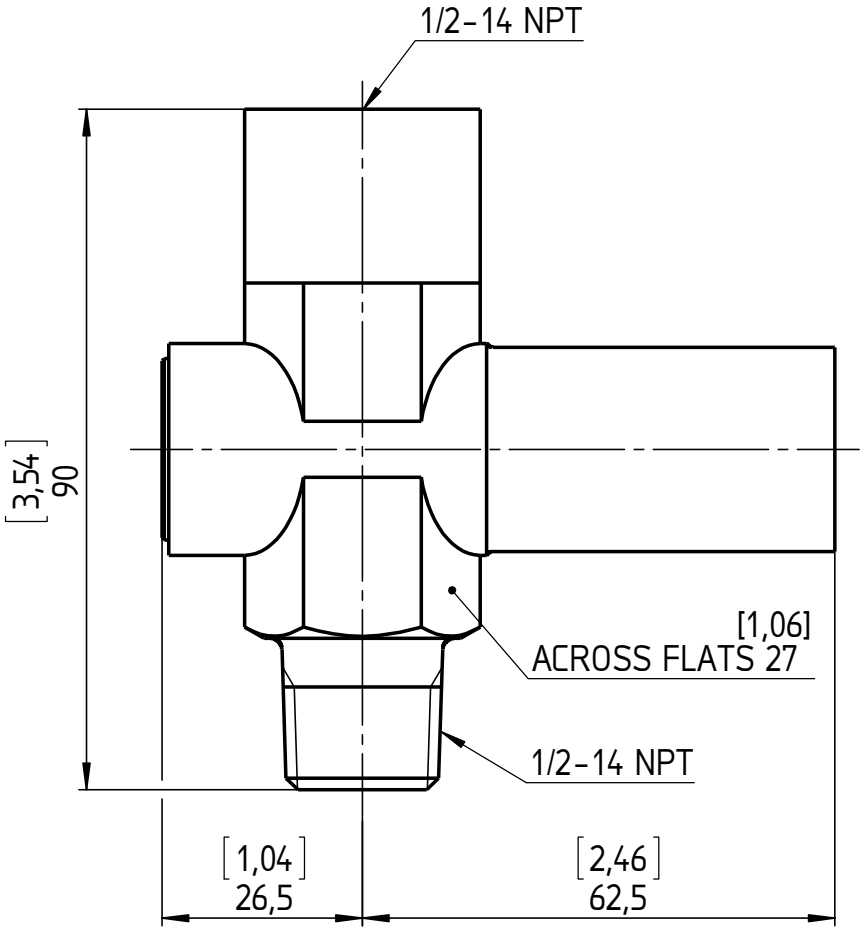

All specifications are subject to change without notice.

This drawing includes confidential information which is the property of ASHCROFT INC. This copy is loaned for a specific purpose, with the understanding that it will not be reproduced or used for any other purpose or disclosed to others, and it will be returned on demand.

	Date	Name
Drawn	22.04.14	J. Krott
Checked	22.04.14	Th. Wel

Rev.	Description	Date	Na.

ASHCROFT®

Dimensions in mm [inch]

General Dimension Limiter, PL02, 1/2-14 NPTm - 1/2-14 NPTf

DWG. NO.
A 076 I 8-Limiter-04-PL02-50